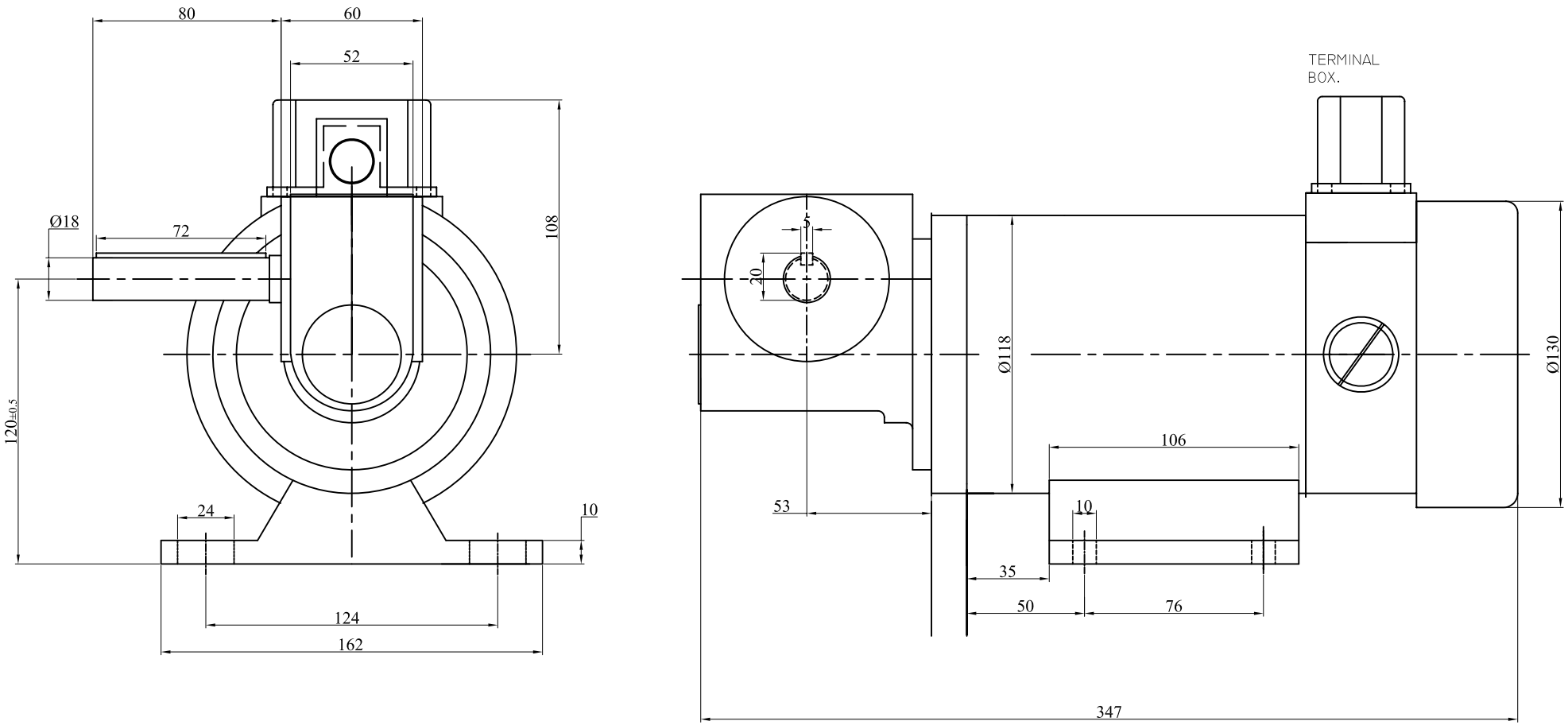

NOTE: ALL UNSPECIFIED DIMENSIONS ARE HAVING TOLERANCE OF ±0.1mm.

SPECIFICATIONS

MODEL	POWER IN WATTS/HP	SPEED IN RPM	VOLTAGE IN VDC	CURR. IN AMPS	RATIO	OUTPUT SPEED IN RPM	TORQUE IN KG-CM	INSL. CLASS	DUTY CYCLE	PROTEC- -TION	ENCL.	WEIGHT (KG)
M7NWA	360/0.5	1500	180	2.6	6.6	220	48	B	S1	IP44	TEFC	13.0
M7NWB	360/0.5	1500	180	2.6	10.0	150	72	B	S1	IP44	TEFC	
M7NWC	360/0.5	1500	180	2.6	14.5	100	100	B	S1	IP44	TEFC	
M7NWD	360/0.5	1500	180	2.6	20.0	75	192	B	S1	IP44	TEFC	

MOUNTING : FOOT

ALL DIMENSIONS ARE IN MM.

REV.NO	DATE	DESCRIPTION	DRN.BY	APD.BY

DYNAFLUX

PMDC MOTOR.

TITLE	118DIA WORM-foot/MOTOR.
REVISION NO.	REVISION DATE.
00	05/06/2009
DRAWN BY.	APPROVED BY.
MANOHAR	R.S.KUNDGOLKAR.

MMC ELECTRIC COMPANY PVT.LTD. BELGAUM.

SHEET	1 OF 1	MATERIAL
SCALE. N.T.S.		------
DRG.NO.	MI-118/121-M[N]	