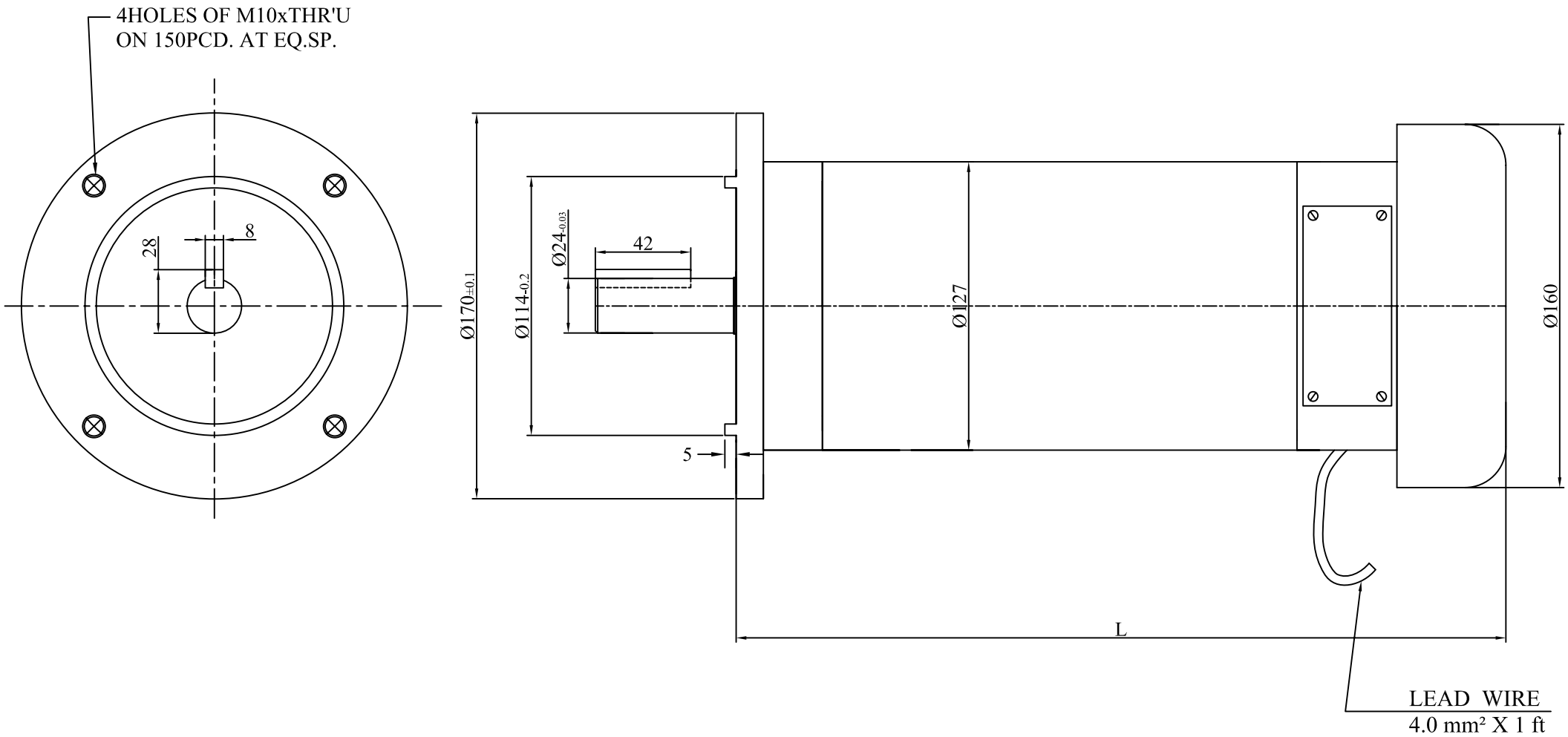

NOTE: ALL UNSPECIFIED DIMENSIONS ARE HAVING TOLERANCE OF ±0.1MM.

SPECIFICATIONS

MODEL	POWER IN WATTS/HP	SPEED IN RPM	VOLTAGE IN VDC	CURR. IN AMPS	TORQUE IN KG-CM	INSL. CLASS	DUTY CYCLE	PROTEC- -TION	ENCL.	MOUNT- ING	FRAME	LENGTH L in mm	WEIGHT IN Kg
M9BB	746 / 1.0	1500	12 / 24	77.0 / 39.0	48	B	S1	IP 44	TEFC	FLANGE	NEEMA	339	21.0
M9BE	746 / 1.0	3000	12 / 24	77.0 / 39.0	24	B	S1	IP 44	TEFC	FLANGE	NEEMA	339	21.0

ALL DIMENSIONS ARE IN MM.	REV.NO	DATE	DESCRIPTION	DRN.BY	APD.BY

DYNAFLUX

PMDC MOTOR.

TITLE	Ø127/MOTOR.	MMC ELECTRIC COMPANY PVT.LTD. BELGAUM.
REVISION NO.	REVISION DATE.	
00	14/04/2009	
DRAWN BY.	APPROVED BY.	SHEET 1 OF 1 / MATERIAL
MANOHAR	R.S.KUNDGOLKAR	SCALE. N.T.S. / -----
		DRG.NO. MI-127/188-M